MACHINING & INSPECTION NOTES

1) USE GAGEMAKER BALL SIZE: 0.115"

2) PIN TAPER TOLERANCES: 0.250 / 0.2525

3) PITCH TOLERANCE: +/- 0.0015" PER INCH

4) 3" T.P.F. = 7.1250 DEG.

5) GAGE AXIAL MOVEMENT RATIO TO DIA.= 4:1

A.P.I. PIN RELIEF

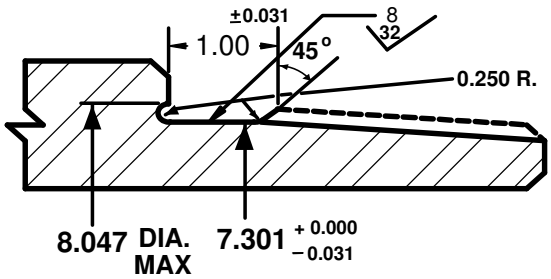

THREAD FORM

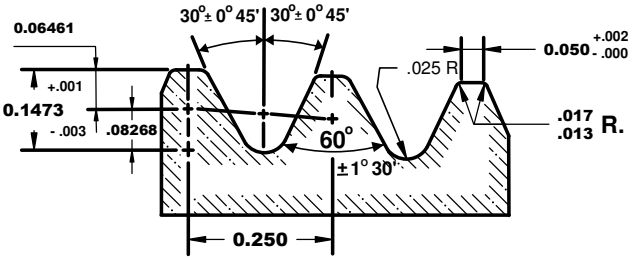

4 T.P.I. 3" TAPER PER FOOT

BEVEL DIAMETERS

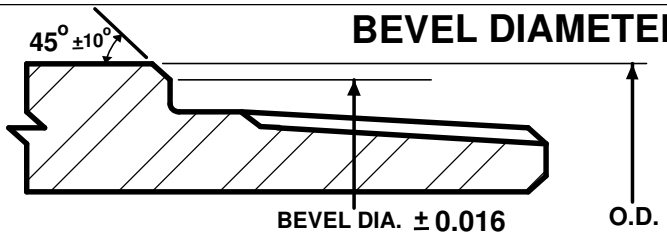

O.D.	9 5/8	9 3/4	9 7/8	10	10 1/4	10 1/2				
B.D.	9.141	9.328	9.328	9.515	9.703	9.891				

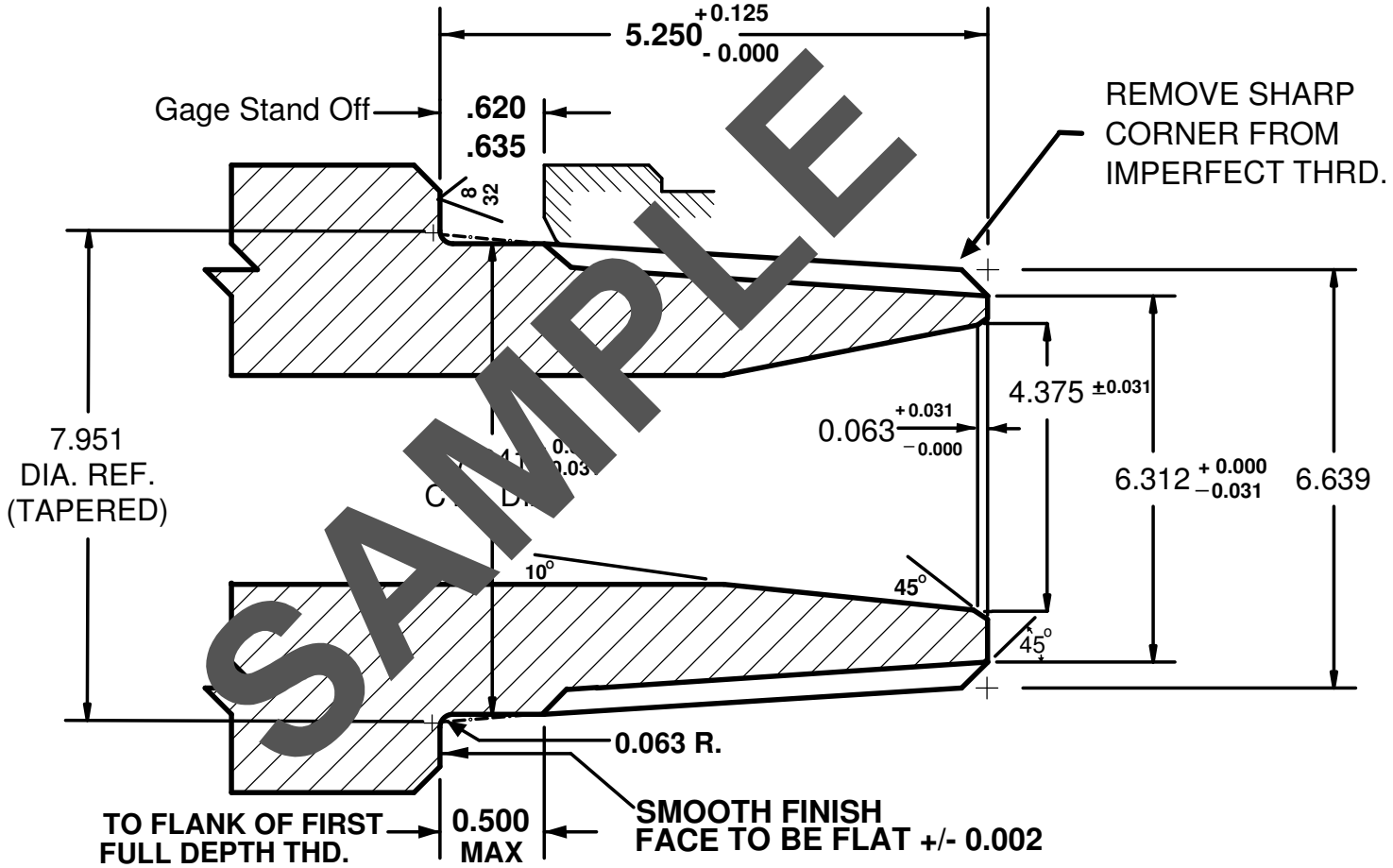

SAMPLE

8 5/8 REGULAR PIN

DRAWING NO 8a

REFERENCE USE ONLY